5E3 Tweed Deluxe Schematic

www.dockeryamps.com
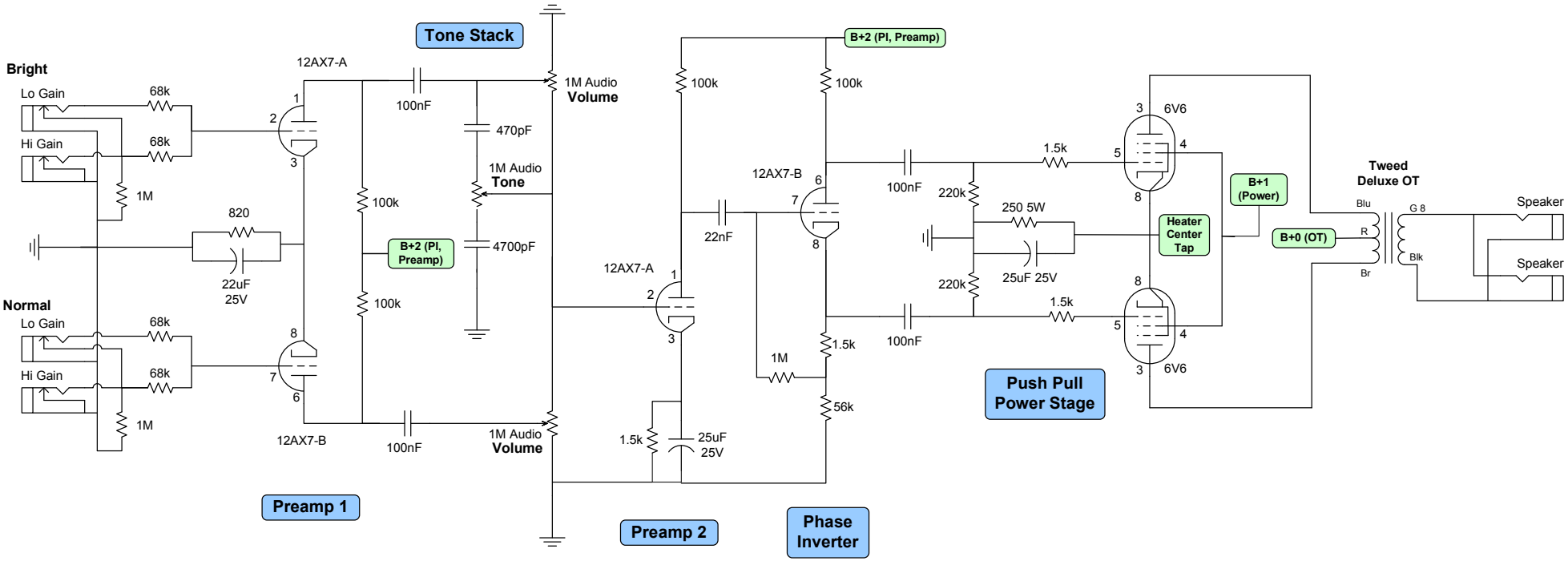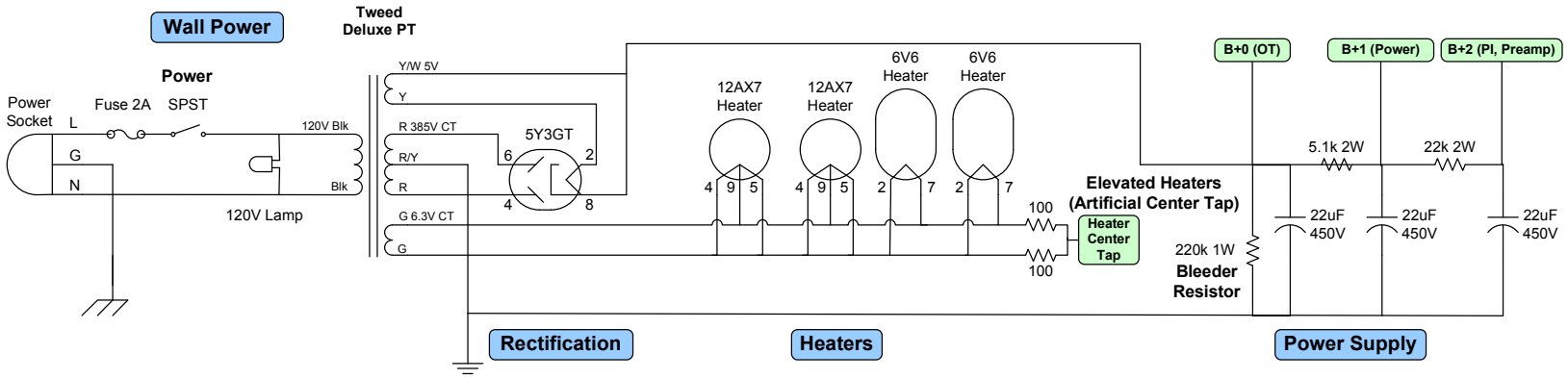
April 2, 2008